ETA-Danmark A/S
Göteborg Plads 1
DK-2150 Nordhavn
Tel. +45 72 24 59 00
Internet www.etadanmark.dk

Authorised and notified according to Article 29 of the Regulation (EU) No 305/2011 of the European Parliament and of the Council of 9 March 2011

MEMBER OF EOTA

European Technical Assessment ETA-24/0955 of 2024/10/15

I General Part

Technical Assessment Body issuing the ETA and designated according to Article 29 of the Regulation (EU) No 305/2011: ETA-Danmark A/S

Trade name of the construction product:	Ramset™ AnkaScrew™ Tapcon Xtrem™
Product family to which the above construction product belongs:	Mechanical fasteners for use in cracked and uncracked concrete
Manufacturer:	ITW Australia (Ramset) 1 Ramset Drive Chirnside Park VIC 3116 AUSTRALIA
Manufacturing plant:	ITW Plant 1
This European Technical Assessment contains:	19 pages including 13 annexes which form an integral part of the document
This European Technical Assessment is issued in accordance with Regulation (EU) No 305/2011, on the basis of:	EAD 330747-00-0601; Fasteners for use in concrete for redundant non-structural systems
Note:	

II SPECIFIC PART OF THE EUROPEAN TECHNICAL ASSESSMENT

1 Technical description of product

The Ramset™ concrete screw AnkaScrew™ Tapcon Xtrem™ is an anchor made of zinc plated steel. The concrete screw comes in size 6 with an embedment depth of 35 mm or 55 mm. The anchor is screwed into a predrilled cylindrical drill hole. The special thread of the anchor cuts an internal thread into the member while setting. The anchorage is characterized by mechanical interlock in the special thread.

The product description is given in Annex A and the intended use specifications of the concrete screw are detailed in Annex B.

2 Specification of the intended use(s) in accordance with the applicable European Assessment Document (hereinafter EAD)

The performances given in Section 3 are only valid if the anchor is used in compliance with the specifications and conditions given in Annex B.

The provisions made in this European Technical Assessment are based on an assumed intended working life of the anchor of 50 years.

The indications given on the working life cannot be interpreted as a guarantee given by the producer or Assessment Body, but are to be regarded only as a means for choosing the right products in relation to the expected economically reasonable working life of the works.

3 Performance of the product and references to the methods used for its assessment

Characteristic	Assessment of characteristic
3.2 Safety in case of fire (BWR2)	
Reaction to fire	**Class A1**
Resistance to fire	
Fire resistance to steel failure (tension load)	Annex C
Fire resistance to pull-out failure (tension load)	Annex C
Fire resistance to steel failure (shear load)	Annex C
3.3 Hygiene, health and the environment (BWR3)	
Content, emission and/or release of dangerous substances	No performance assessed
3.4 Safety and accessibility in use (BWR4)	
Characteristic resistance to tension load (static and quasi-static loading)	
Resistance to steel failure	Annex C
Resistance to pull-out failure	Annex C
Resistance to concrete cone failure	Annex C
Robustness	Annex C
Minimum edge distance and spacing	Annex B
Edge distance to prevent splitting under load	Annex B
Characteristic resistance to shear load (static and quasi-static loading)	
Resistance to steel failure under shear load	Annex C
Resistance to pry-out failure	Annex C
Resistance to concrete edge failure	Annex C
Characteristic resistance for all load directions and modes of failure for simplified design	
Characteristic resistance	Annex C
Durability	
Durability	Annex B

See additional information in section 3.9

3.9 General aspects related to the performance of the product

The European Technical Assessment is issued for the product on the basis of agreed data/information, deposited with ETA-Danmark, which identifies the product that has been assessed and judged. Changes to the product or production process, which could result in this deposited data/information being incorrect, should be notified to ETA-Danmark before the changes are introduced. ETA-Danmark will decide whether or not such changes affect the ETA and consequently the validity of the CE marking on the basis of the ETA and if so whether further assessment or alterations to the ETA, shall be necessary.

4 Assessment and verification of constancy of performance (AVCP) (hereinafter AVCP) system applied, with reference to its legal base.

4.1 AVCP system

In accordance with European Assessment Documents EAD No. 330747-00-0601, the applicable European legal act is: [97/161/EC].
The system to be applied is: **2+**

5 Technical details necessary for the implementation of the AVCP system, as provided for in the applicable EAD

Technical details necessary for the implementation of the AVCP system are laid down in the control plan deposited at ETA-Danmark prior to CE marking

Issued in Copenhagen on 2024-10-15 by

Thomas Bruun
Managing Director, ETA-Danmark

Ramset™ AnkaScrew™ Tapcon Xtrem™

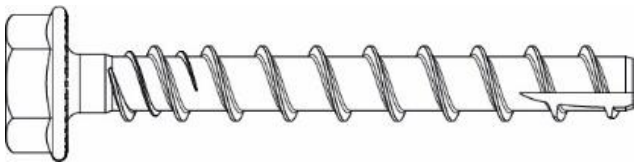

Installed condition in concrete

e.g. Ramset™ AnkaScrew™ Tapcon Xtrem™ concrete screw, with hexagon head and fixture

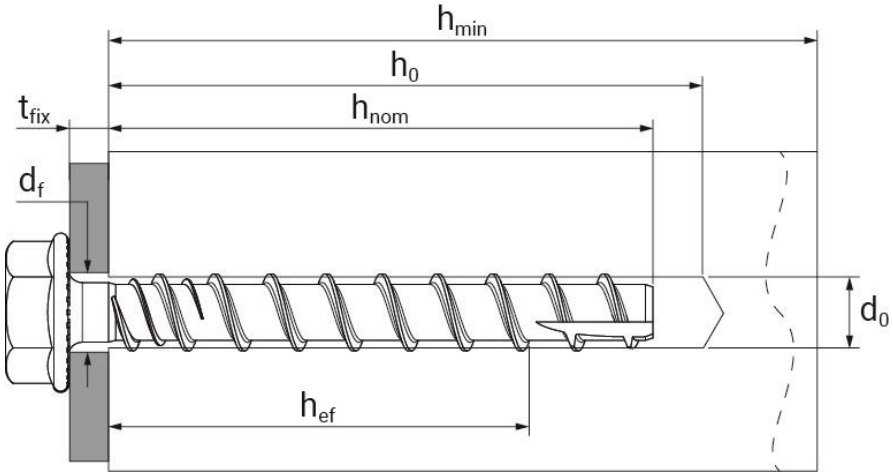

h_{min}	: Minimum thickness of member
d_0	: Nominal drill hole diameter
h_0	: Drill hole depth
d_f	: Clearance hole diameter
h_{nom}	: Nominal embedment depth
h_{ef}	: Effective embedment depth
t_{fix}	: Thickness of fixture

Ramset™ AnkaScrew™ Tapcon Xtrem™	
Product description Installation condition in concrete	**Annex A1**

Installed condition in precast prestressed hollow core slabs

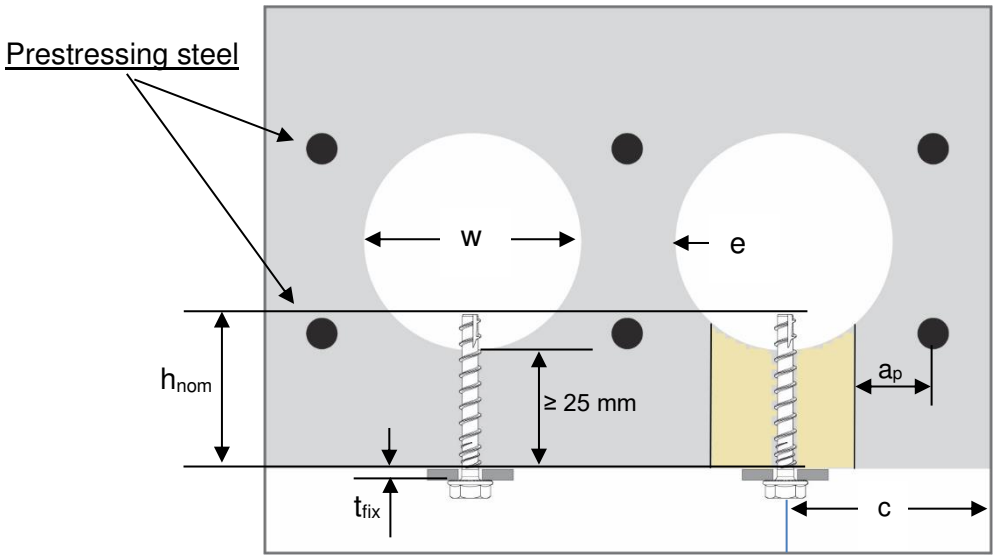

w	: Core width	w/e ≤ 4,2
e	: Web thickness	
h_{nom}	: Nominal embedment depth	
t_{fix}	: Thickness of fixture	
c	: Minimum edge distance ≥ 100mm	
a_p	: Distance between anchor position and prestressing steel ≥ 50mm	

Product versions

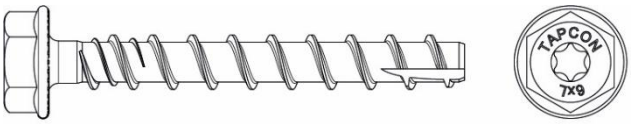

HFL Version with washer
Hexagon head SW13 and TORX drive30
e.g. AnkaScrew™ Tapcon Xtrem™ HFL 6x43

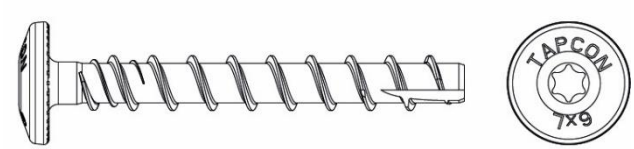

DOME Version with large pan head
TORX drive 30
e.g. AnkaScrew™ Tapcon Xtrem™ DOME 6x60

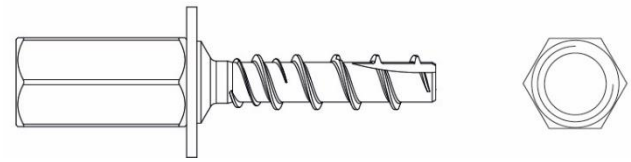

ROD Version Hexagon drive SW13
e.g. AnkaScrew™ Tapcon Xtrem™ ROD 6x55 M8/M10

Marking:

- Designation: TAPCON
- Screw size: 6
- Screw length: 80

Material

Table A1: Material

Product name	Material
AnkaScrew™ Tapcon Xtrem™	Steel EN 10263-4:2017 galvanized acc. to EN ISO 4042:2022

Dimensions

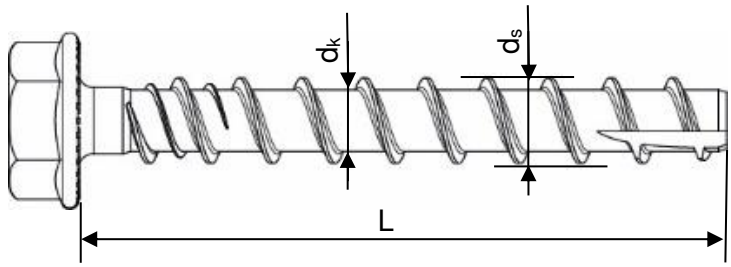

Table A2 : Dimension

Fastener size AnkaScrew™ Tapcon Xtrem™			6
Screw length	≤ L	[mm]	100
Core diameter	d_k	[mm]	5,8
Thread outer diameter	d_s	[mm]	8,0

Specification of Intended use

Anchorages subject to:

- Static and quasi static loads
- Fire exposure in concrete
- Fire exposure in hollow concrete slabs
- Used only for multiple use for redundant non-structural systems according to EAD 330747-00-0601, EN 1992-4:2018

Base materials:

- Compacted reinforced and unreinforced concrete without fibres of concrete Strength classes C20/25 to C50/60 according to EN 206:2013.
- Cracked or uncracked concrete.
- Prestressed hollow core slabs with w/e ≤ 4,2, and strength classes C45/55 to C50/60

Use conditions (Environmental conditions):

- Concrete screws subject to dry internal conditions: all screw types.

Design:

- Anchorages are designed in accordance with EN 1992-4 : 2018 and EOTA Technical Report TR 055
- Anchorages are designed under the responsibility of an engineer experienced in anchorages and concrete work.
- Verifiable calculation notes and drawings are to be prepared taking account of the loads to be anchored. The position of the anchor is indicated on the design drawings (e.g. position of the anchor relative to reinforcement or to supports, etc.).

Installation:

- Hammer drilling only
- Anchor installation carried out by appropriately qualified personnel and under the supervision of the person responsible for technical matters on site.
- In case of aborted hole: new drilling must be drilled at a minimum distance of twice the depth of aborted hole or closer, if the aborted hole is filled with high strength mortar and only if the hole is not in the direction of the oblique tensile or shear load.
- After installation further turning of the anchor must not be possible.
- The head of the anchor is supported in the fixture and is not damaged

Table B1: Setting data in concrete for AnkaScrew™ Tapcon Xtrem™ HFL / DOME / ROD

Fastener size AnkaScrew™ Tapcon Xtrem™			6					
Type			HFL	DOME	ROD	HFL	DOME	ROD
Nominal embedment depth		h_{nom}	h_{nom1}			h_{nom2}		
		[mm]	35			55		
Nominal drill hole diameter	d_0	[mm]	6					
Cutting diameter of drill bit	d_{cut} ≤	[mm]	6,40					
Drill hole depth	h_0 ≥	[mm]	40			65		
Clearance hole diameter	d_f ≤	[mm]	9					
Wrench size	SW	[mm]	13	-	13	13	-	13
Torx Size	TX	[-]	30	30	-	30	30	-
Torque impact screw driver (Max. torque according to manufacturer's instructions)		[Nm]	160			210		

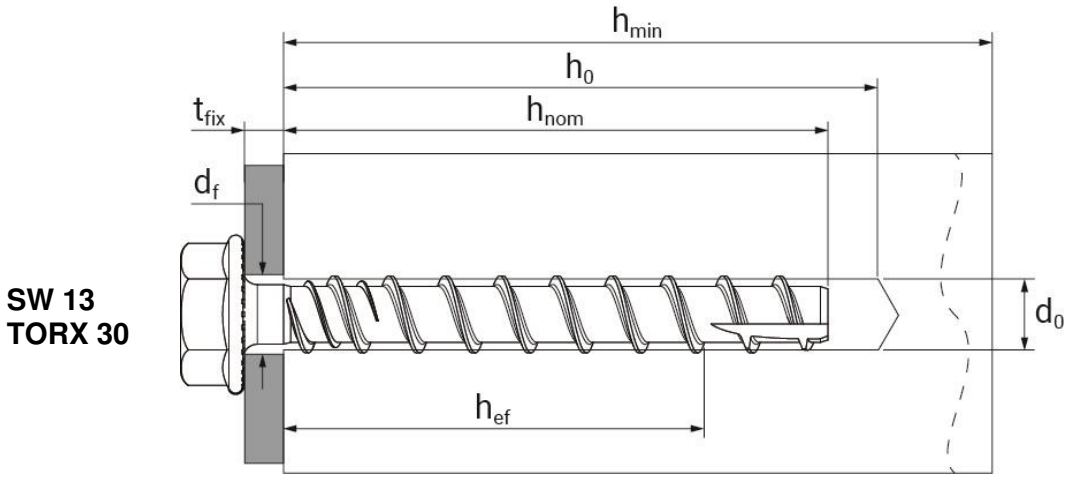

Ramset™ AnkaScrew™ Tapcon Xtrem™	
Intended use Installation parameters	**Annex B2**

Installation parameters for anchorages in concrete

Table B2: Minimum thickness of member, minimum edge distance and minimum spacing in concrete

Fastener size AnkaScrew™ Tapcon Xtrem™			6	
Nominal embedment depth		h_{nom1} [mm]	h_{nom1}	h_{nom2}
			35	55
Minimum thickness of member	h_{min}	[mm]	80	100
Minimum edge distance	c_{min}	[mm]	35	40
Minimum spacing	s_{min}	[mm]	35	40

Installation Instructions in concrete

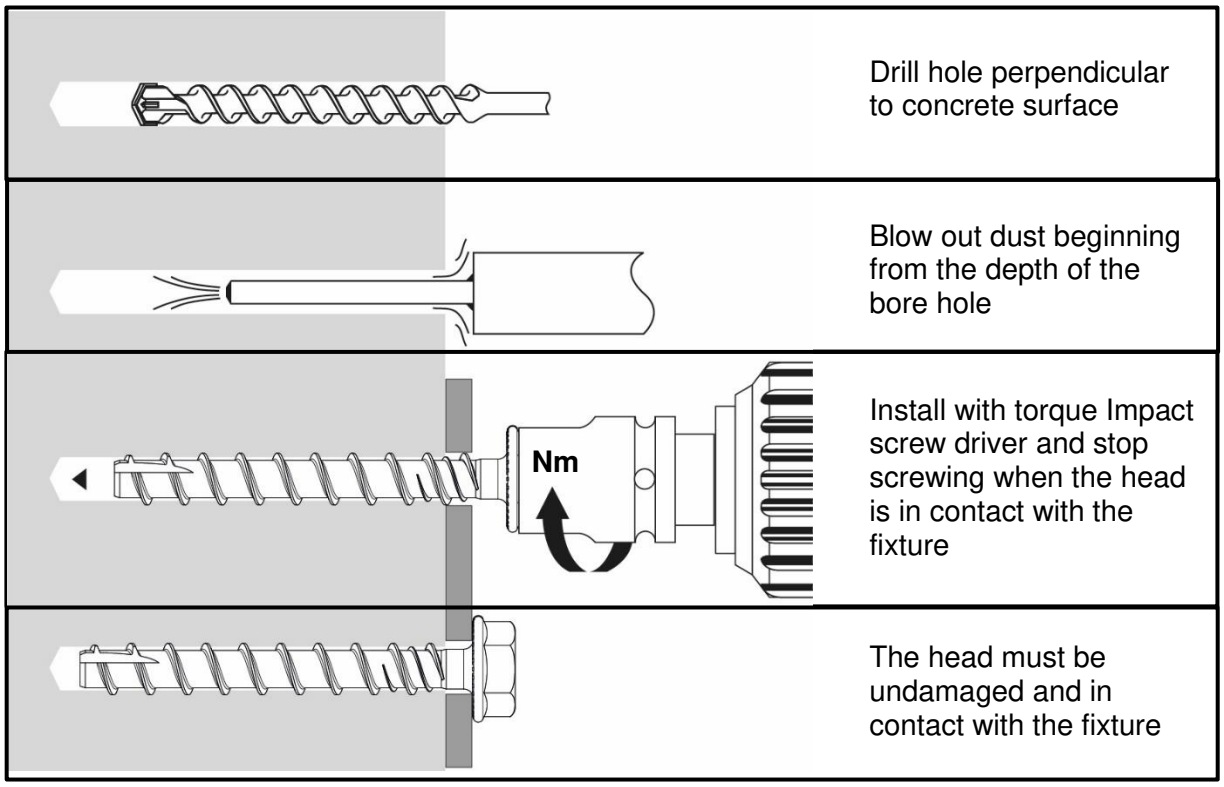

Installation parameters for anchorages in precast prestressed hollow core slabs

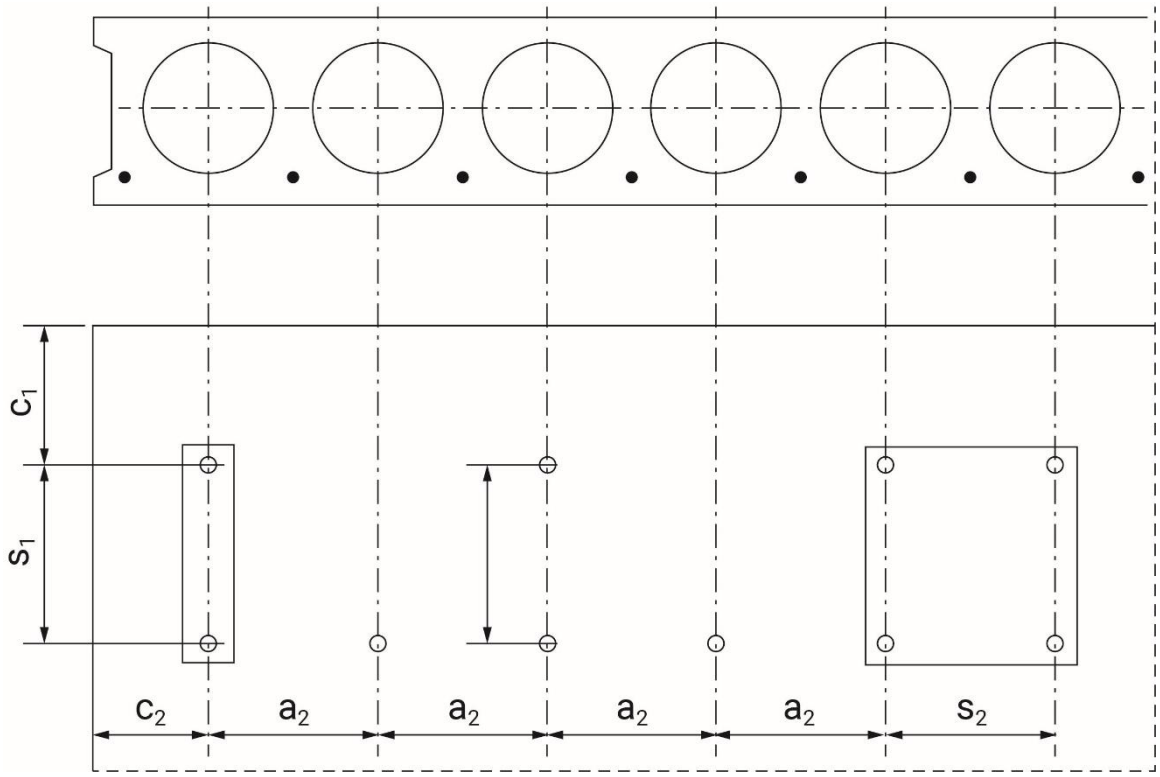

c_1, c_2 : Edge distance

s_1, s_2 : Anchor spacing

a_1, a_2 : Distance between anchor groups

Table B3: Limiting distances for application in precast prestressed hollow core slabs

Distances for application in precast prestressed hollow core slabs			
Minimum edge distance	c_{min}	[mm]	≥ 100
Minimum anchor spacing	s_{min}	[mm]	≥ 200
Minimum distance between anchor groups	a_{min}	[mm]	≥ 100
Distance of prestressing steel	l_p	[mm]	≥ 100
Distance between anchor position and prestressing steel	a_p	[mm]	≥ 50

Installation Instructions in prestressed hollow core slabs

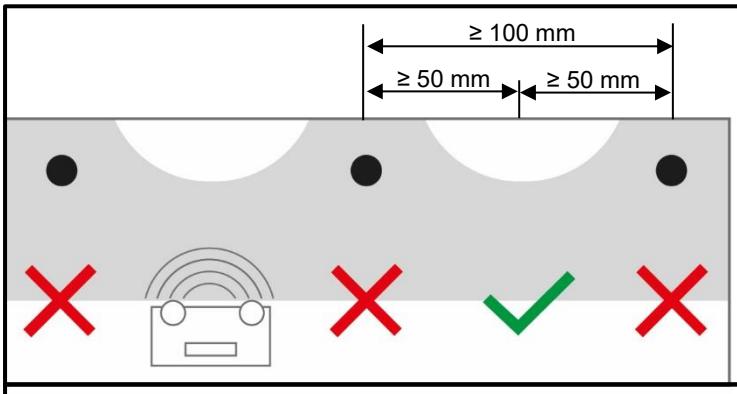

Use rebar detector

Mark rebar and borehole position

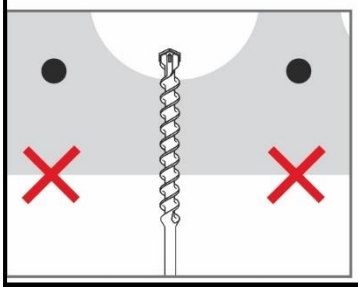

Drill hole perpendicular to concrete surface

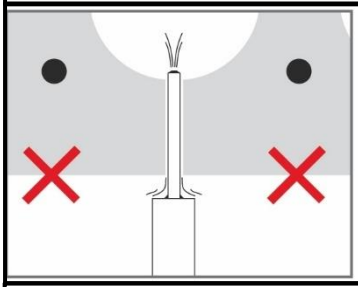

Blow out dust beginning from the depth of the bore hole

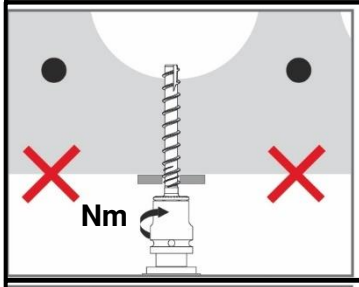

Install with torque impact screw driver and stop screwing when the head is in contact with the fixture

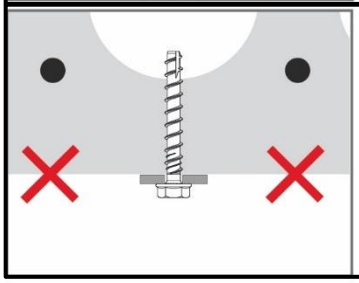

The head must be undamaged and in contact with the fixture

Ramset™ AnkaScrew™ Tapcon Xtrem™	**Annex B5**
Intended use Installation instructions for anchorages in precast prestressed hollow slabs	

Table C1: Characteristic values for static and quasi-static loading

Fastener size AnkaScrewTM Tapcon XtremTM HFL / DOME / ROD				6	
Nominal embedment depth			h_{nom}	h_{nom1}	h_{nom2}
			[mm]	35	55
Steel failure for tension and shear loading					
Characteristic tension load		$N_{Rk,s}$	[kN]	23,6	
Partial factor tension load		$\gamma_{Ms,N}$	[-]	1,4	
Characteristic shear load		$V_{Rk,s}$	[kN]	3,4	8,5
Partial factor shear load		$\gamma_{Ms,V}$	[-]	1,5	
Ductility factor		k_7	[-]	0,98	
Characteristic bending load		$M^0_{Rk,s}$	[Nm]	22,9	
Pull-out failure					
Characteristic tension load in uncracked concrete C20/25		$N_{Rk,p}$	[kN]	**5,0**	**12,0**
Increasing factor for $N_{Rk,p,}$	C25/30	ψ_c	[-]	1,10	1,08
	C30/37			1,19	1,14
	C40/50			1,34	1,26
	C50/60			1,47	1,35
Characteristic tension load in cracked concrete C20/25		$N_{Rk,p}$	[kN]	**3,0**	**10,0**
Increasing factor for $N_{Rk,p}$	C25/30	ψ_c	[-]	1,05	1,02
	C30/37			1,09	1,03
	C40/50			1,16	1,06
	C50/60			1,21	1,08
Installation safety factor		γ_{inst}	[-]	1,2	1,2
Concrete cone failure and splitting failure					
Effective embedment depth		h_{ef}	[mm]	27,3	44,3
k-factor	cracked	$k_{cr,N}$	[-]	7,7	
	uncracked	$k_{ucr,N}$	[-]	11,0	
Concrete cone failure	spacing	$s_{cr,N}$	[mm]	3 h_{ef}	
	edge distance	$c_{cr,N}$	[mm]	1,5 h_{ef}	
Splitting failure	Resistance	$N^0_{Rk,sp}$	[kN]	$N_{Rk,p}$	$N_{Rk,p}$
	spacing	$s_{cr,sp}$	[mm]	180	200
	edge distance	$c_{cr,sp}$	[mm]	90	100
Installation safety factor		γ_{inst}	[-]	1,2	1,2
Concrete pryout failure					
Factor for pry-out failure		k_8	[-]	1,0	
Installation factor		γ_{inst}	[-]	1,0	
Concrete edge failure					
Effective length in concrete		$l_f = h_{ef}$	[mm]	27,3	44,3
Nominal outer diameter of screw		d_{nom}	[mm]	6	
Installation safety factor		γ_{inst}	[-]	1,0	

Table C2: Characteristic values of resistance in precast prestressed hollow core slabs C45/55 to C50/60

Fastener size AnkaScrew™ Tapcon Xtrem™ HFL / DOME / ROD			6
Bottom flange thickness	d_b	[mm]	≥ 25
Characteristic resistance	F^0_{Rk}	[kN]	**2,5**
Spacing and edge distance	s_{cr}	[mm]	200
	c_{cr}	[mm]	100
Installation safety factor	γ_{inst}	[-]	1,2

Table C3: Fire exposure – characteristic values of resistance in concrete

Fastener size AnkaScrew™ Tapcon Xtrem™ HFL / DOME / ROD				6	
Nominal embedment depth			h_{nom}	h_{nom1}	h_{nom2}
			[mm]	35	55
Steel failure for tension and shear load					
Characteristic resistance	R30	$N_{Rk,s,fi30}$	[kN]	1,00	1,50
	R60	$N_{Rk,s,fi60}$	[kN]	1,00	1,28
	R90	$N_{Rk,s,fi90}$	[kN]	0,70	0,84
	R120	$N_{Rk,s,fi120}$	[kN]	0,54	0,62
	R30	$V_{Rk,s,fi30}$	[kN]	1,00	1,50
	R60	$V_{Rk,s,fi60}$	[kN]	1,00	1,28
	R90	$V_{Rk,s,fi90}$	[kN]	0,70	0,84
	R120	$V_{Rk,s,fi120}$	[kN]	0,54	0,62
	R30	$M^0_{Rk,s,fi30}$	[kNm]	0,76	1,14
	R60	$M^0_{Rk,s,fi60}$	[kNm]	0,76	0,97
	R90	$M^0_{Rk,s,fi90}$	[kNm]	0,53	0,64
	R120	$M^0_{Rk,s,fi120}$	[kNm]	0,41	0,47
Pull-out failure					
Characteristic resistance	R30-90	$N_{Rk,p,fi}$	[kN]	0,60	1,4
	R120	$N_{Rk,p,fi}$	[kN]	0,50	1,1
Concrete cone failure					
Characteristic resistance	R30-90	$N_{Rk,c,fi}$	[kN]	1,2	2,9
	R120	$N_{Rk,c,fi}$	[kN]	1,0	2,3
Edge distance					
R30 - R120		$C_{cr,N,fi}$	[mm]	2 x h_{ef}	
In case of fire attack from more than one side, the minimum edge distance shall be ≥300mm.					
Spacing distance					
R30 - R120		$S_{cr,N,fi}$	[mm]	4 x h_{ef}	
Pryout failure					
R30 - R120		k_8	[-]	1,0	1,0
Characteristic resistance	R30-90	$V_{Rk,cp,fi}$	[kN]	1,2	2,9
	R120	$V_{Rk,cp,fi}$	[kN]	1,0	2,3
The anchorage depth has to be increased for wet concrete by at least 30 mm compared to the given value.					

Table C4: Fire exposure – characteristic values of resistance in hollow concrete slab

Fastener size AnkaScrew™ Tapcon Xtrem™ HFL / DOME / ROD				6
Bottom flange thickness		d_b	[mm]	≥ 25
Steel failure for tension and shear load				
Characteristic resistance	R30	$F_{Rk,s,fi30}$	[kN]	0,72
	R60	$F_{Rk,s,fi60}$	[kN]	0,62
	R90	$F_{Rk,s,fi90}$	[kN]	0,53
	R120	$F_{Rk,s,fi120}$	[kN]	0,48
	R30	$M^0_{Rk,s,fi30}$	[kNm]	0,54
	R60	$M^0_{Rk,s,fi60}$	[kNm]	0,47
	R90	$M^0_{Rk,s,fi90}$	[kNm]	0,40
	R120	$M^0_{Rk,s,fi120}$	[kNm]	0,36
Pull-out failure				
Characteristic resistance	R30-90	$F_{Rk,p,fi}$	[kN]	0,60
	R120	$F_{Rk,p,fi}$	[kN]	0,50
Spacing and distance edge				
Spacing	R30-R120	$S_{cr,N,fi}$	[mm]	200
Edge distance	R30-R120	$C_{cr,N,fi}$	[mm]	100